FLUTE
Roberto Barbieri, 2008

Poliform

FLUTE
Roberto Barbieri, 2008

DESCRIPTION

Typology	Coffee table
Base	Drawn aluminium lacquer
Top	Medium-density fibre panel in lacquer - marble - glass

DIMENSIONS
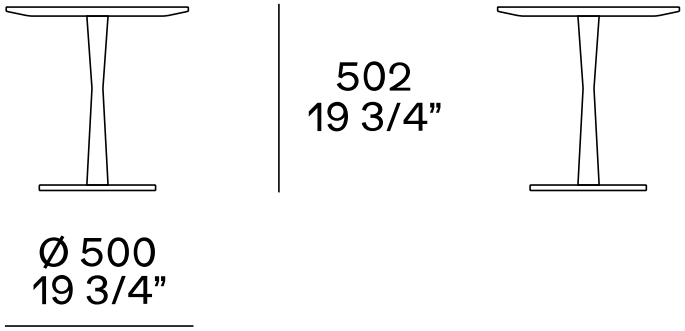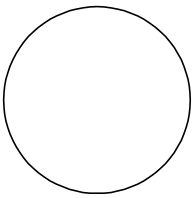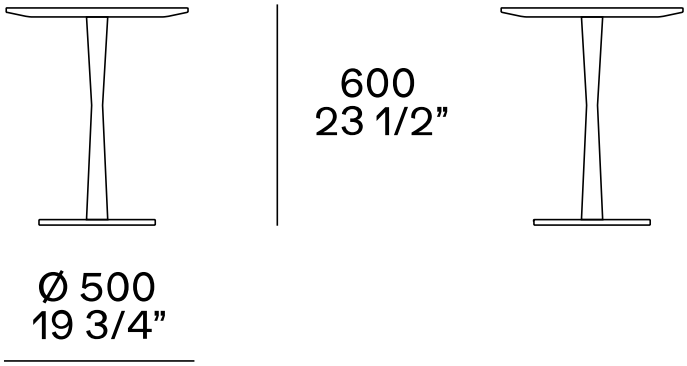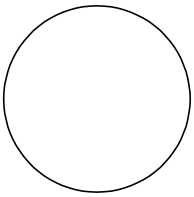
Height mm 502