CONCORDE
????????? ???????, 2009

????????

?????????	?????????? ????
????	????????????? ??????????? ????? ??????? ?????????
?????	????????????? ?????? ??????
??????????	?????????????? ???? ? ??????? ????????? ??? ??????

Poliform

CONCORDE
????????? ???????, 2009

???????

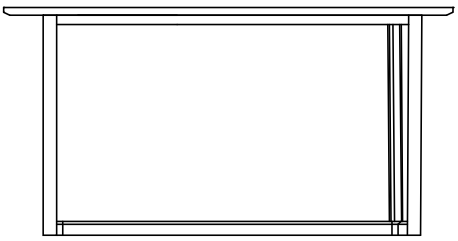

740
29 1/4”

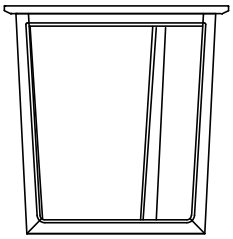

1450
57”

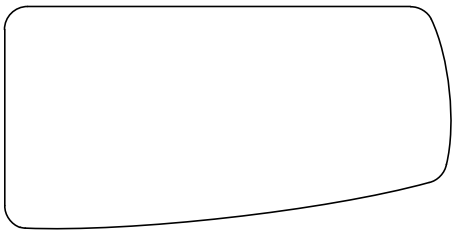

720
28 1/4”

580
22 3/4”

480
18 3/4”

?????????????? ??????? ?????? ??? ?????

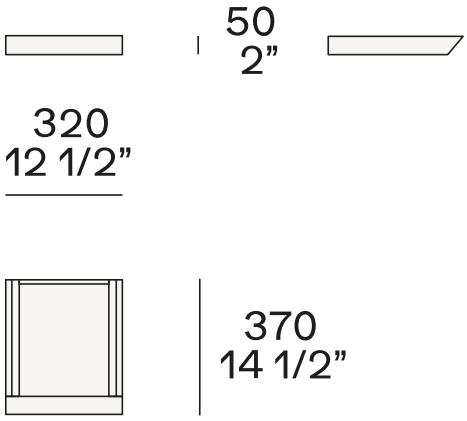
50
2”
320
12 1/2”
370
14 1/2”

??????????????? ???? ??? ??????????